Docusign Envelope ID: F5B710D0-1422-4DB9-822B-AD3E1868782F

SITE 6 WALL ENVELOPE

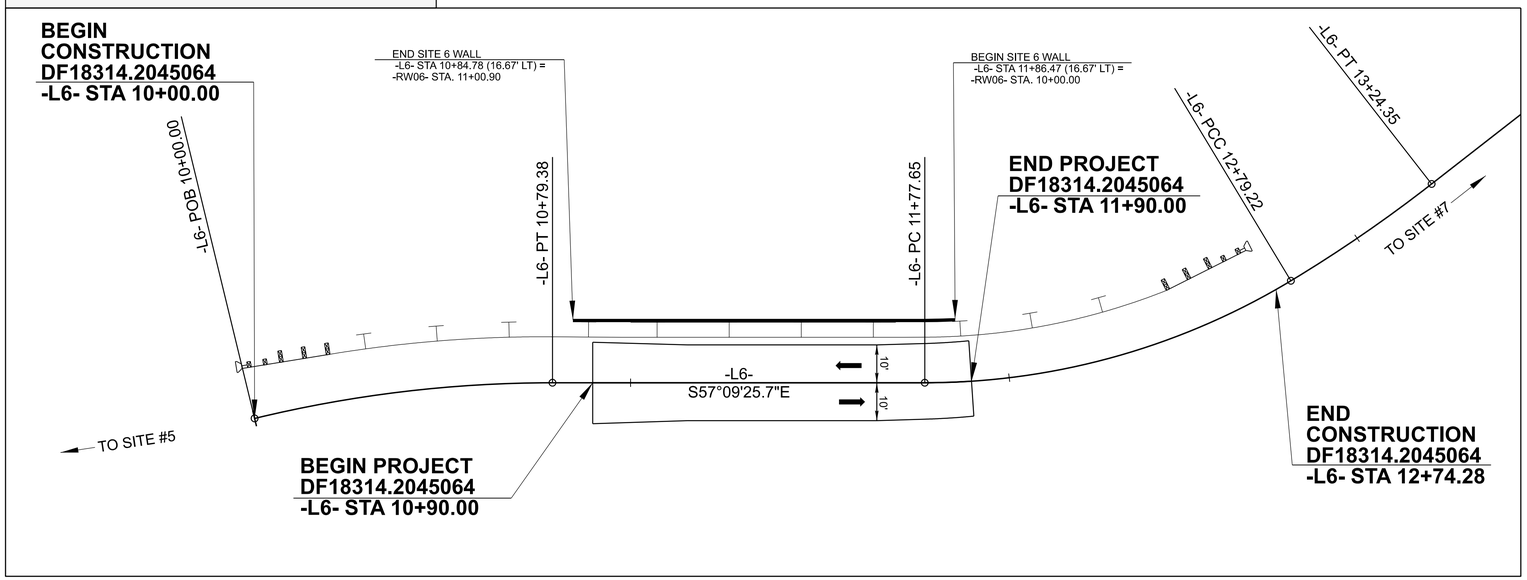

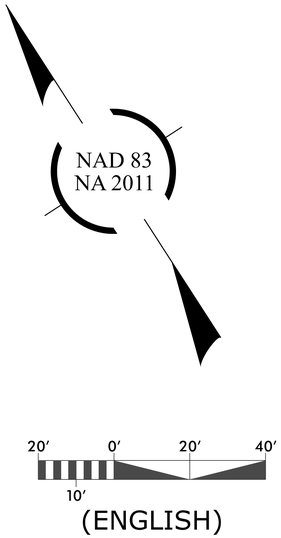

SITE 6 WALL - FRONT FACE

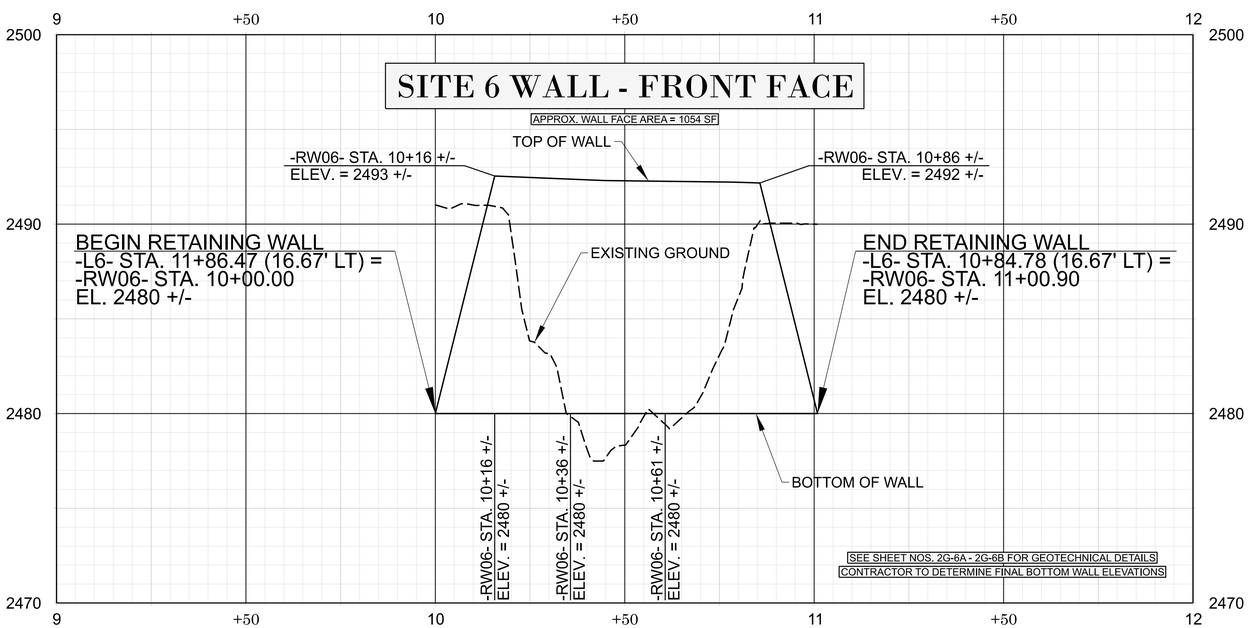

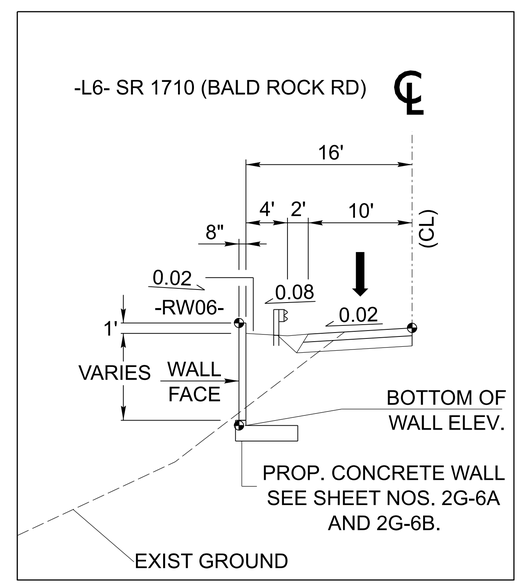

DF18314.
2045064

FINAL | W-3

NORTH CAROLINA
DEPARTMENT OF TRANSPORTATION
HENDERSON COUNTY

HIGHWAY DIVISION 14

ROADWAY DESIGN ENGINEER

7/29/2025

NORTH CAROLINA PROFESSIONAL SEAL 039234 ENGINEER NIKKI T. HONEYCUTT

Signed by:
Nikki Honeycutt
03B5A2B03B5A4A8...

DOCUMENT NOT CONSIDERED FINAL UNLESS ALL SIGNATURES COMPLETED

PREPARED BY

KCA
KISINGER CAMPO & ASSOCIATES

NC FIRM LICENSE No: C-1506
301 Fayettville St.,
Suite 1500
Raleigh, NC 27601
(919)882-7839

REVISIONS